HEAD FRAME INSTALLATION

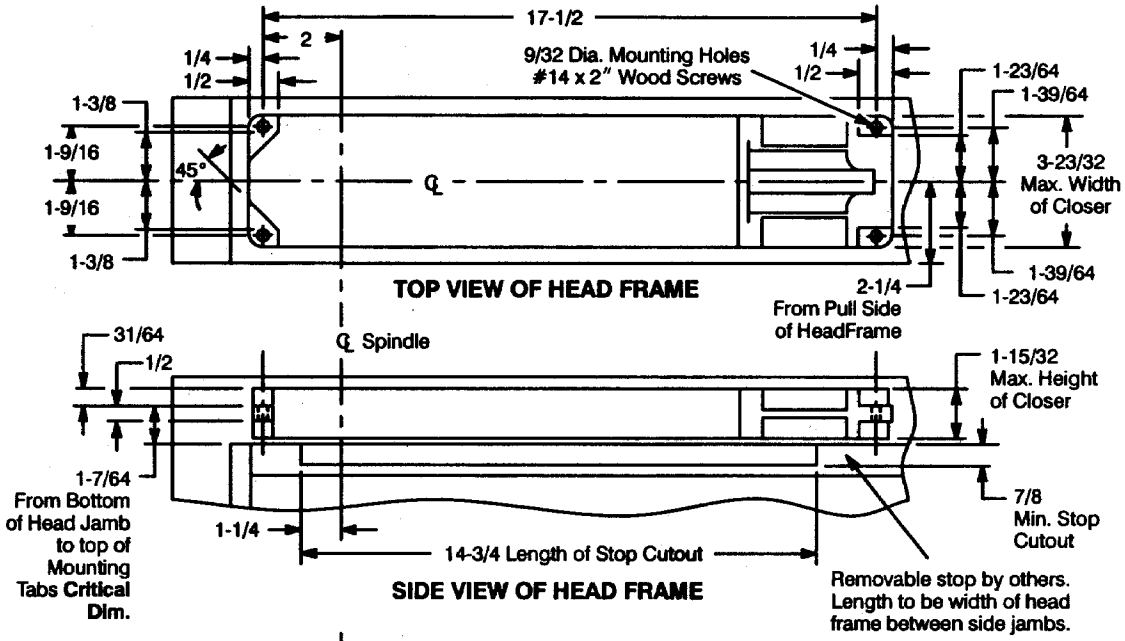

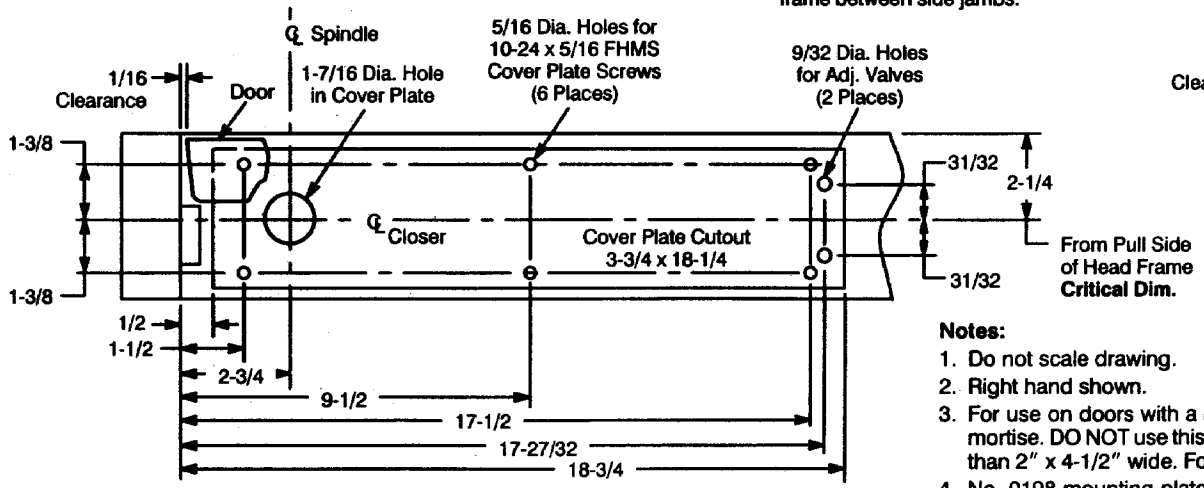

DOOR INSTALLATION

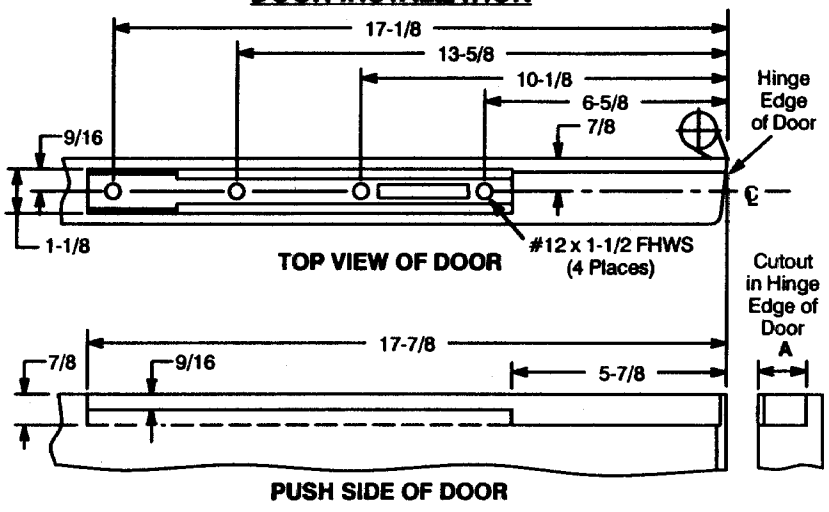

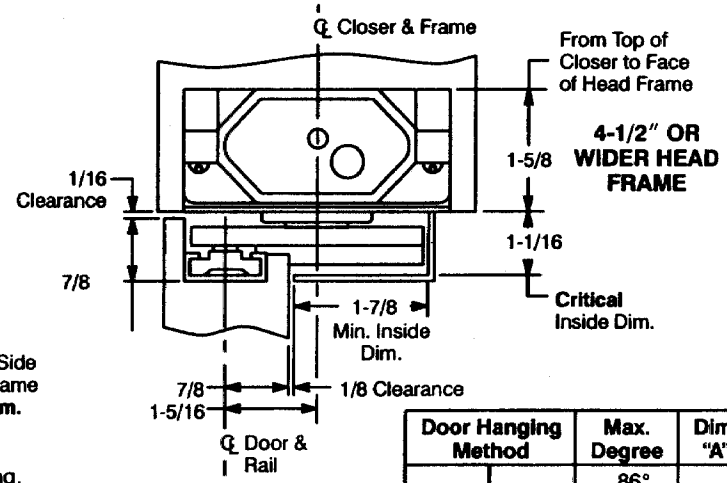

Notes:

1. Do not scale drawing.
2. Right hand shown.
3. For use on doors with a minimum 7/8" deep top door mortise. DO NOT use this template for head frames less than 2" x 4-1/2" wide. For 1-3/4" thick doors only.
4. No. 0198 mounting plate optional extra. See template OC60210.
5. All dimensions are in inches.

Door Hanging Method		Max. Degree	Dim. "A"
Butt Hinge	4 x 4	86°	7/8
		106°	
	4-1/2 x 4-1/2	88°	7/8
		108°	
3/4 Offset Side Jamb Pivot		93°	7/8
		113°	1-5/8

W0700 Overhead Concealed Closer
Offset Hung
Wood Door and Frame
2" x 4-1/2" Minimum Head Frame

RIXSON™

Rixson Specialty Door Controls

www.rixson.com

TEMPLATE NUMBER	DATE
OC60330	2-00